EOS II DWJS

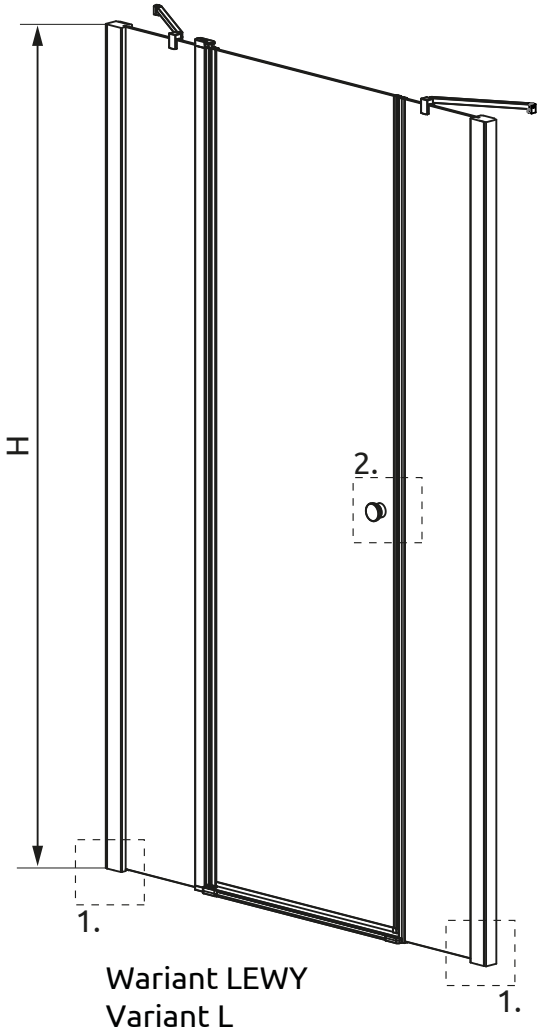

Wariant LEWY
Variant L

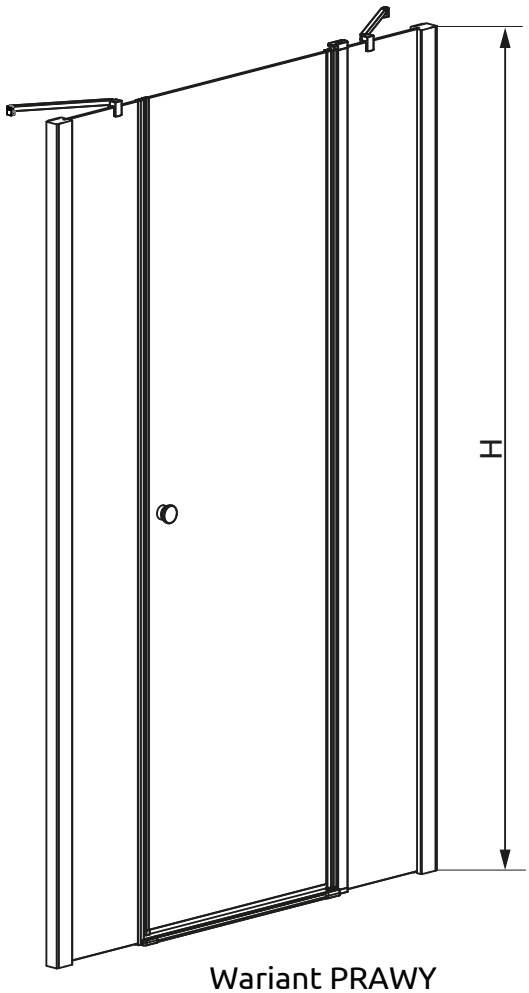

Wariant PRAWY
Variant R

1.

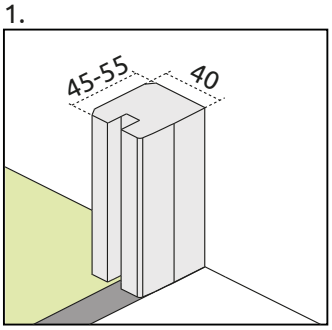

2.

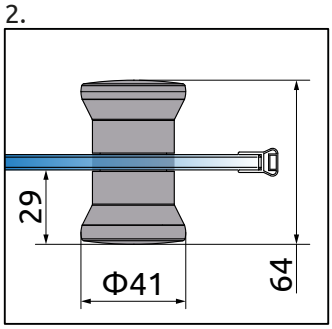

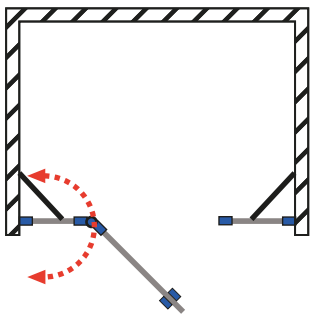

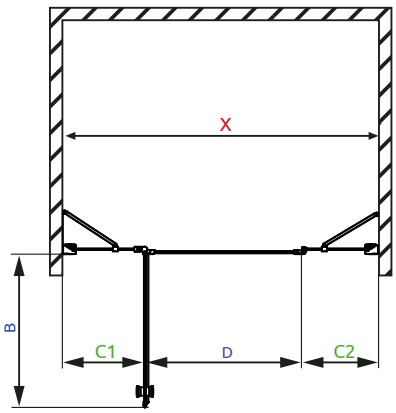

Model	X	B	C1	C2	D	H
DWS 120	1190-1210	580	304-314	285-295	595	1950
DWS 130	1290-1310	680	304-314	285-295	695	1950
DWS 140	1390-1410	780	304-314	285-295	795	1950

RADAWAY Sp. z o. o. Jasin; ul. Rabowicka 59, 62-020 Swarzędz, Polska
tel. +48 61 835 75 10, fax +48 61 835 75 11, e-mail: office@radaway.pl, www.radaway.pl