Arcade

Cassetta ad installazione alta / *High-level cistern*

AR 811 / AR 802

Disegni Tecnici
Technical Drawings

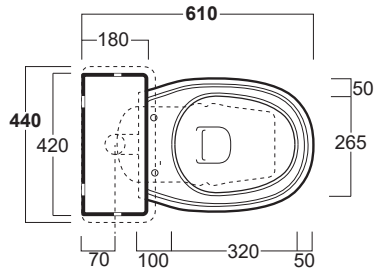

Cassetta con coperchio ad installazione alta
per vaso AR 801 e AR 811

High-level cistern with lid for WC
AR 801 and AR 811

Accessori di completamento
Accesories available
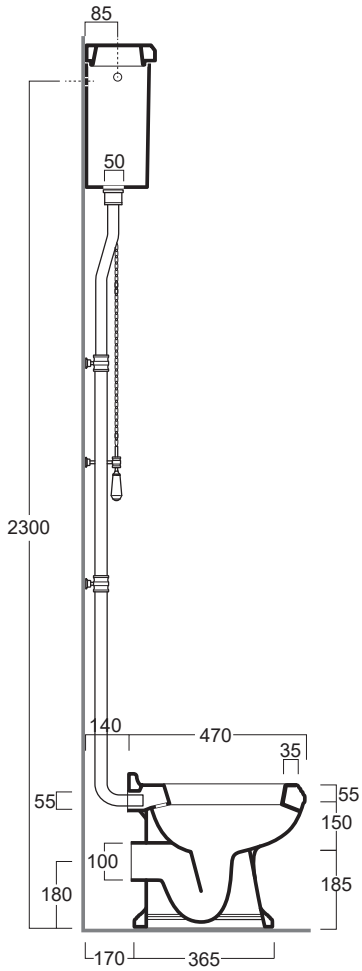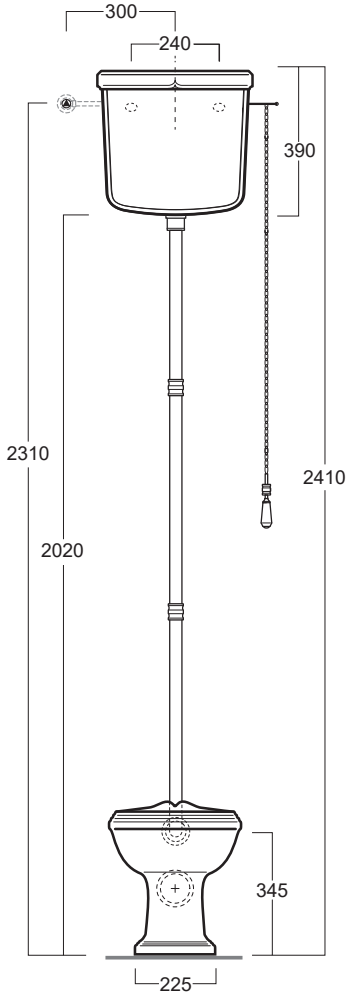
- Vaso con scarico a parete AR 811
- *WC whit wall outlet AR 811*
- Batteria di scarico esterna per cass. alta + tubo di scarico (R02+R03) art.R01
- *Flush mechanism for high-level cistern with flush pipe (R02+R03) art.R01*
- Coprivaso in poliestere con cerniere cromo AR 002 o cerniere oro/bronzo AR003
- *Polyester toilet seat with chrome finish hinges AR 002 or gold/bronze finish hinges AR 003*
- Coprivaso in legno color noce con cerniere cromo AR 004 o cerniere oro/bronzo AR005
- *Wooden toilet seat walnut-finish with chrome-finish hinges AR 004 or gold/bronze-finish hinges AR 005*
- Coprivaso in poliestere con cerniere rallentate cromo AR 006 o cerniere rallentate oro/bronzo AR007
- *Polyester toilet seat with chrome finish soft-closing hinges AR 006 or gold/bronze finish soft-closing hinges AR 007*
- Coprivaso in legno color noce con cerniere rallentate cromo AR 008 o cerniere rallentate oro/bronzo AR009
- *Wooden toilet seat walnut-finish with chrome-finish soft-closing hinges AR 008 or gold/bronze-finish soft-closing hinges AR 009*
- Scatola viti di fissaggio F90
- *Set of fixing screw F90*